Barbecue Grill

Applicable Age Group 6+

Activity Objectives

☑ Analyze barbecue experiences

☑ Understand what gears are and flexibly use horizontal gear transmission

☑ Understand the advantages and disadvantages of gears

Activity Description In this course, children will design a barbecue grill that can rotate the grill rack through gear transmission. The construction uses interlocked horizontal gear transmission.

STEAM Literacy Development Indicators

Method / Indicator	Situation Introduction & Problem Analysis	Using Gears to Construct a Barbecue Grill	Testing Structural Stability and Smoothness	Understanding the Application of Gears
Curiosity and Imagination	●			
Flexibility and Adaptability				
Verbal and Written Communication Skills				
Cross-boundary Cooperation and Exemplary Leadership				
Critical Thinking and Problem-solving Skills			●	
Proactive and Pioneering Spirit				
Ability to Evaluate and Analyze Information				

Building Block List

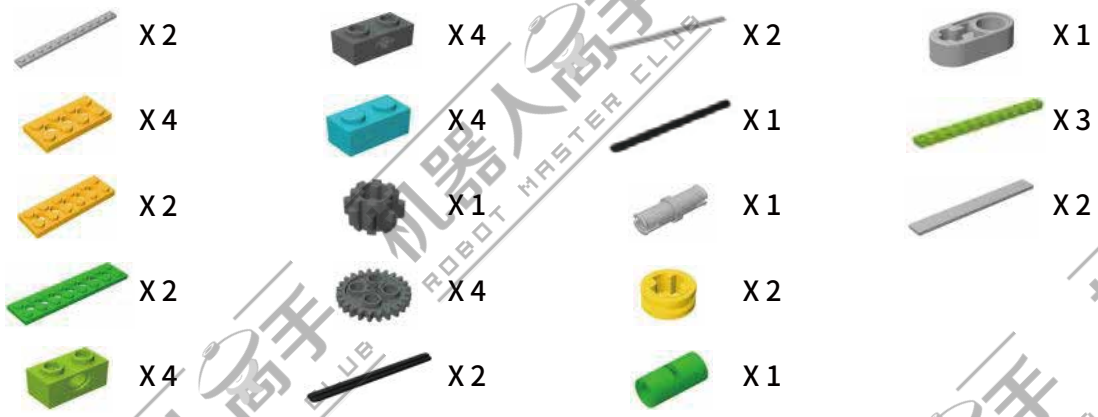

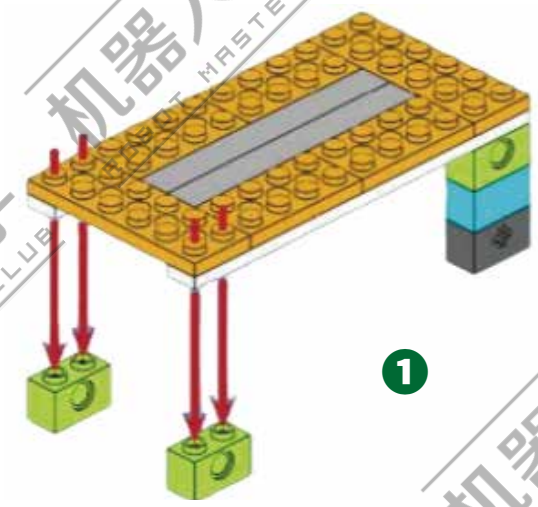

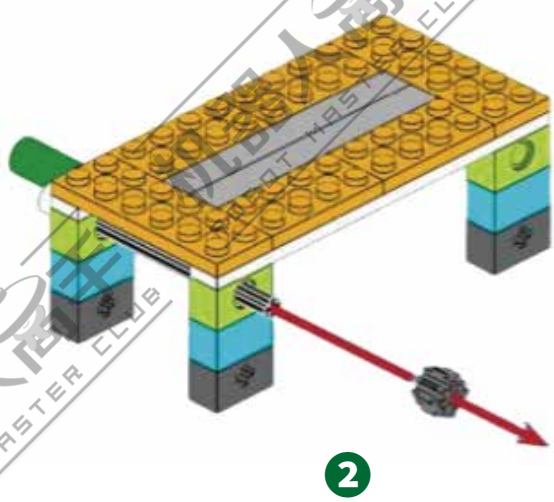

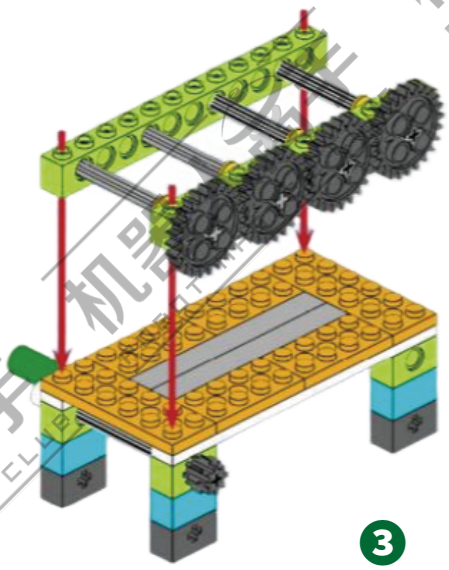

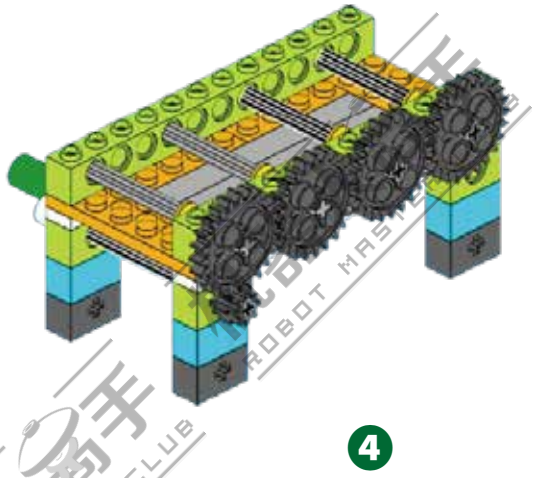

Construction Steps

Makerzoid(App)-Robot Master(Kit)-Soccer Competition(Set)-2 Basic-34 Vigorous Extrusion Machine