Skiing Man

Applicable Age Group 6+

Activity Objectives

- ☑ Familiarize with the vertical transmission method
- ☑ Learn the crank-connecting rod structure
- ☑ Learn the function of friction

Activity Description In this course, children will complete a skiing figure based on vertical gear transmission and crank-connecting rod structure, and learn about what kind of sport skiing is.

STEAM Literacy Development Indicators

Method / Indicator	Situation Introduction & Problem Analysis	Using Gears to Construct a Skiing Figure	Testing Structural Stability and Smoothness	Understanding the Application of Connecting Rod Structures
Curiosity and Imagination	●			
Flexibility and Adaptability				
Verbal and Written Communication Skills				
Cross-boundary Cooperation and Exemplary Leadership				
Critical Thinking and Problem-solving Skills			●	
Proactive and Pioneering Spirit				
Ability to Evaluate and Analyze Information				

Building Block List

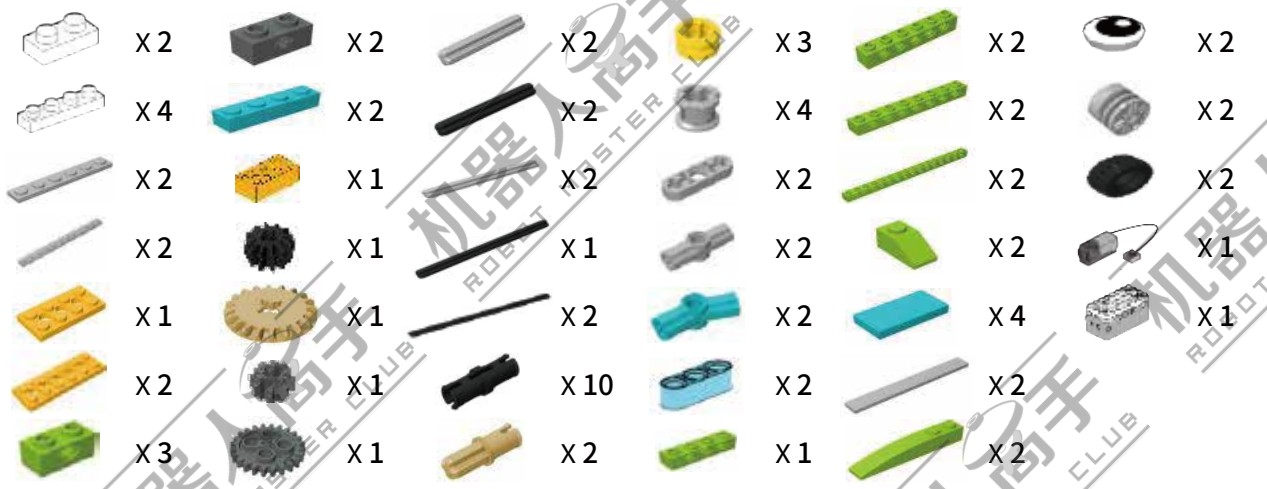

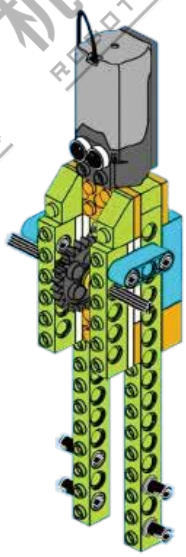

1

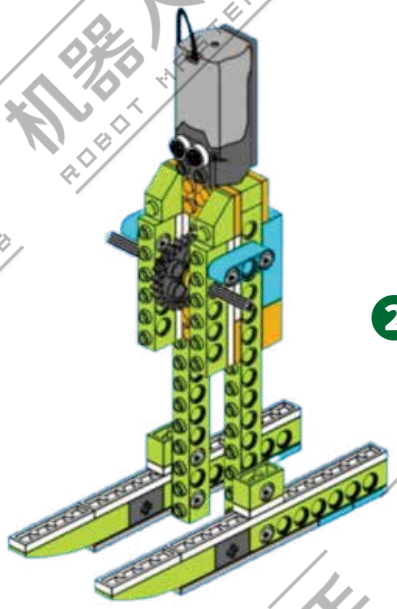

2

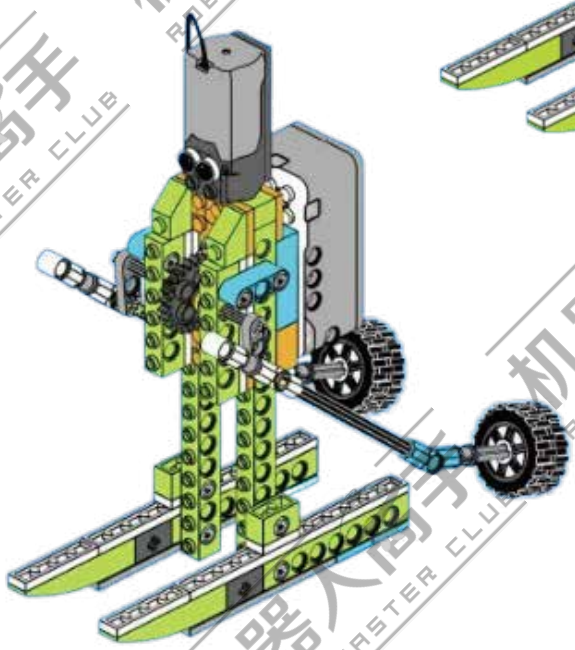

3

Construction Steps

Makerzoid(App)-Robot Master(Kit)-Soccer Competition(Set)-5 Electric Engineering-8 Skiing Man