Electric Sewing Machine

Applicable Age Group 6+

Activity Objectives
- ☑ Understand the purpose of sewing machines
- ☑ Use gear decelerating motion and crank-slider structure

Activity Description In this course, a sewing machine is completed based on gear decelerating motion and crank-slider structure.

STEAM Literacy Development Indicators

Method / Indicator	Situation Introduction & Problem Analysis	Using Gear Decelerating Motion to Complete the Sewing Machine	Testing Structural Stability and Smoothness	Understanding the Application of Gears
Curiosity and Imagination	●			
Flexibility and Adaptability				
Verbal and Written Communication Skills				
Cross-boundary Cooperation and Exemplary Leadership				
Critical Thinking and Problem-solving Skills			●	
Proactive and Pioneering Spirit				
Ability to Evaluate and Analyze Information				

Building Block List

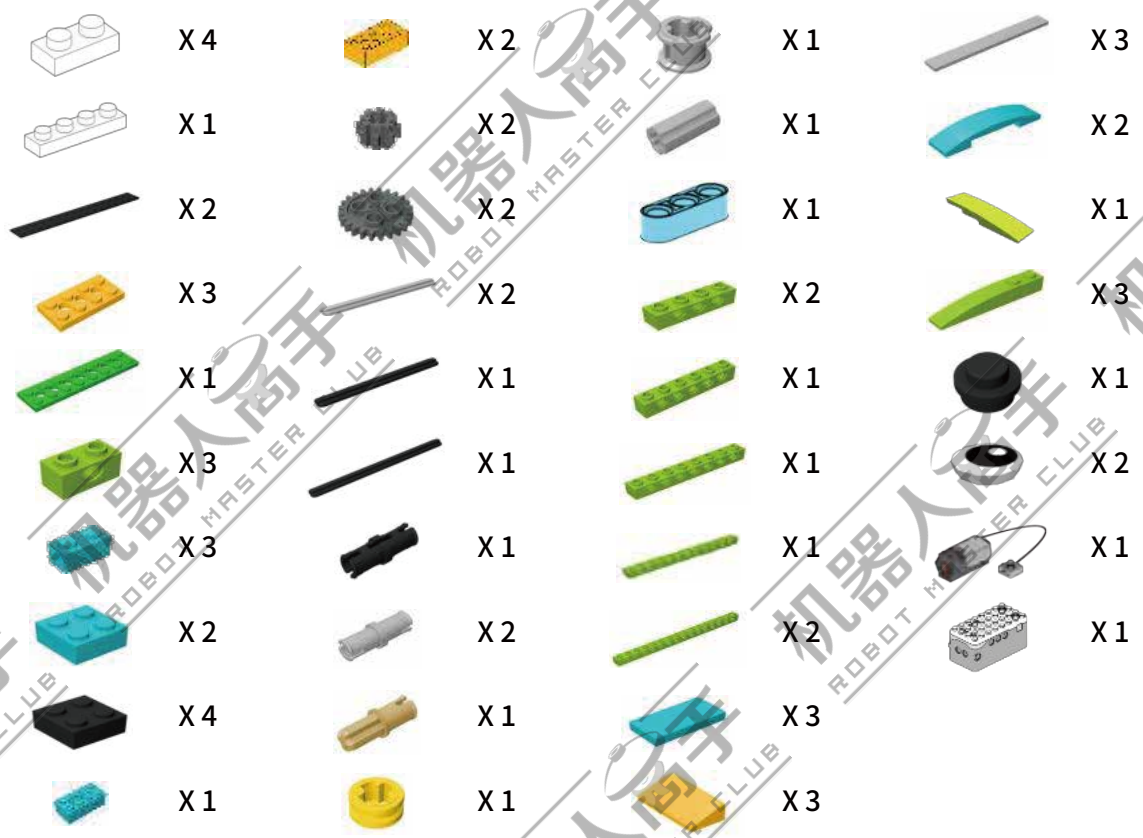

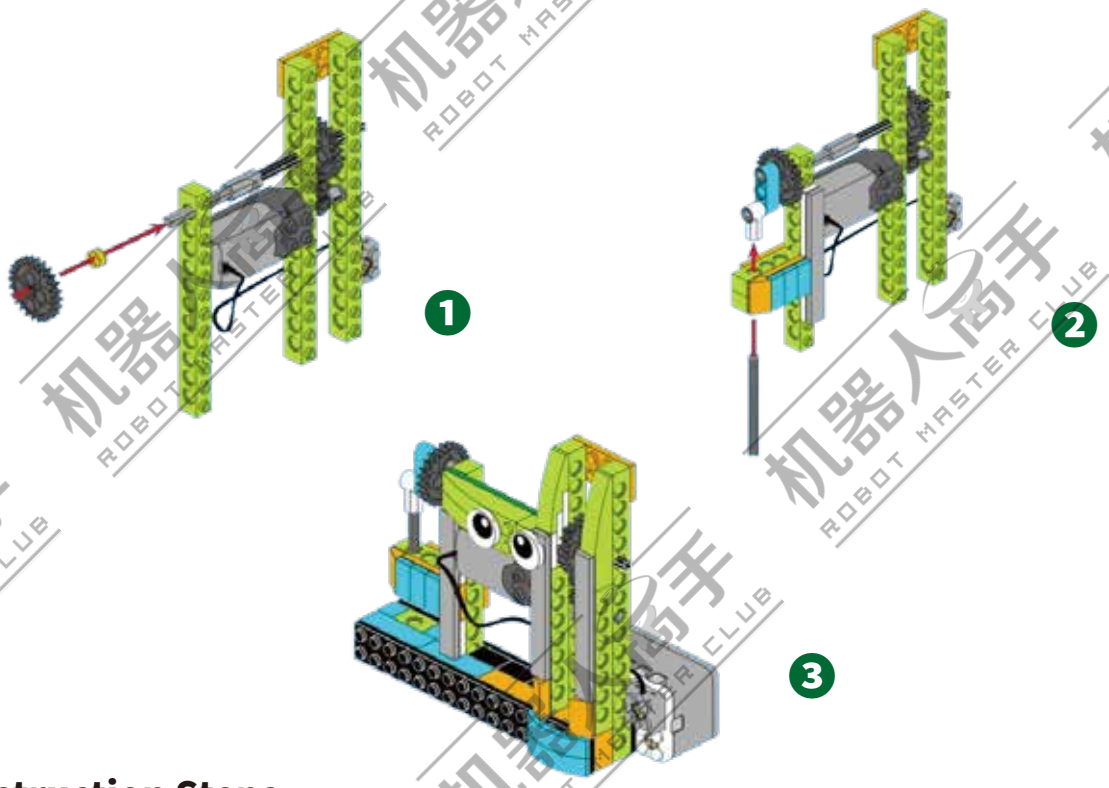

Construction Steps

Makerzoid(App)-Robot Master(Kit)-Soccer Competition(Set)-5 Electric Engineering-20 Electric Sewing Machine