Lifting Platform

Applicable Age Group 6+

Activity Objectives

☑ Understand the types of elevators
☑ Learn worm gears
☑ Understand the instability of quadrilaterals

Activity Description In this course, a lifting platform is completed based on the worm gear structure. Lifting platforms are generally used for high-altitude operations.

STEAM Literacy Development Indicators

Method / Indicator	Situation Introduction & Problem Analysis	Using Gears to Construct a Grinding Machine	Testing Structural Stability and Smoothness	Understanding the Application of Gears
Curiosity and Imagination	●			
Flexibility and Adaptability		●		
Verbal and Written Communication Skills				
Cross-boundary Cooperation and Exemplary Leadership				
Critical Thinking and Problem-solving Skills			●	
Proactive and Pioneering Spirit				●
Ability to Evaluate and Analyze Information				

Building Block List

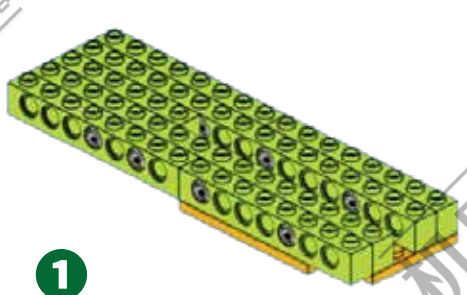

1

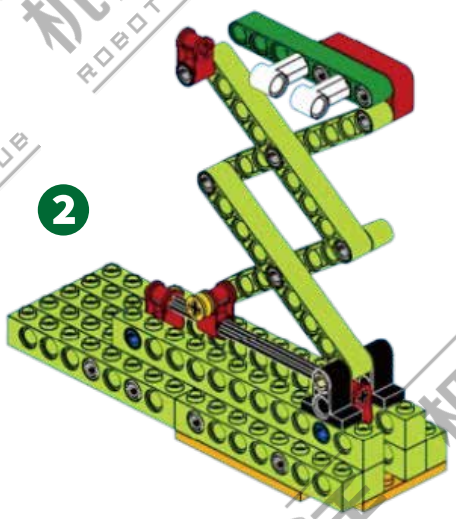

2

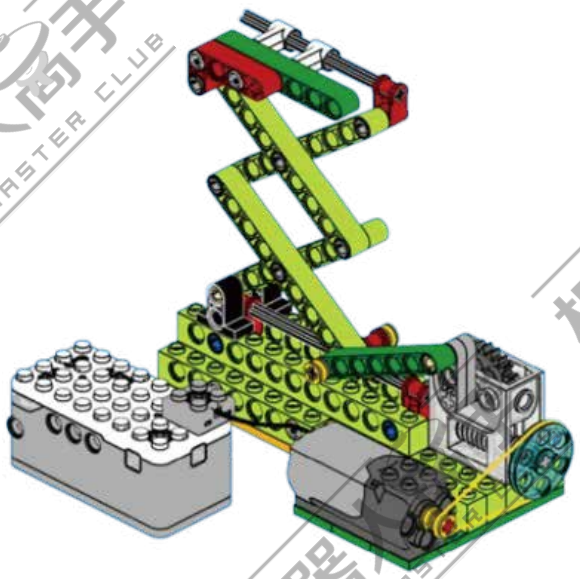

3

Construction Steps

Makerzoid(App)-Robot Master(Kit)-Soccer Competition(Set)-5 Electric Engineering-22 Lifting Platform